ENGINE, EXHAUST SYSTEM - Z26NEY99A4/B4/A6/B6 (C760077)

2026 RZR - RZR XP S 1000 ULTIMATE (R01) - Z26NEY99A4/B4/A6/B6

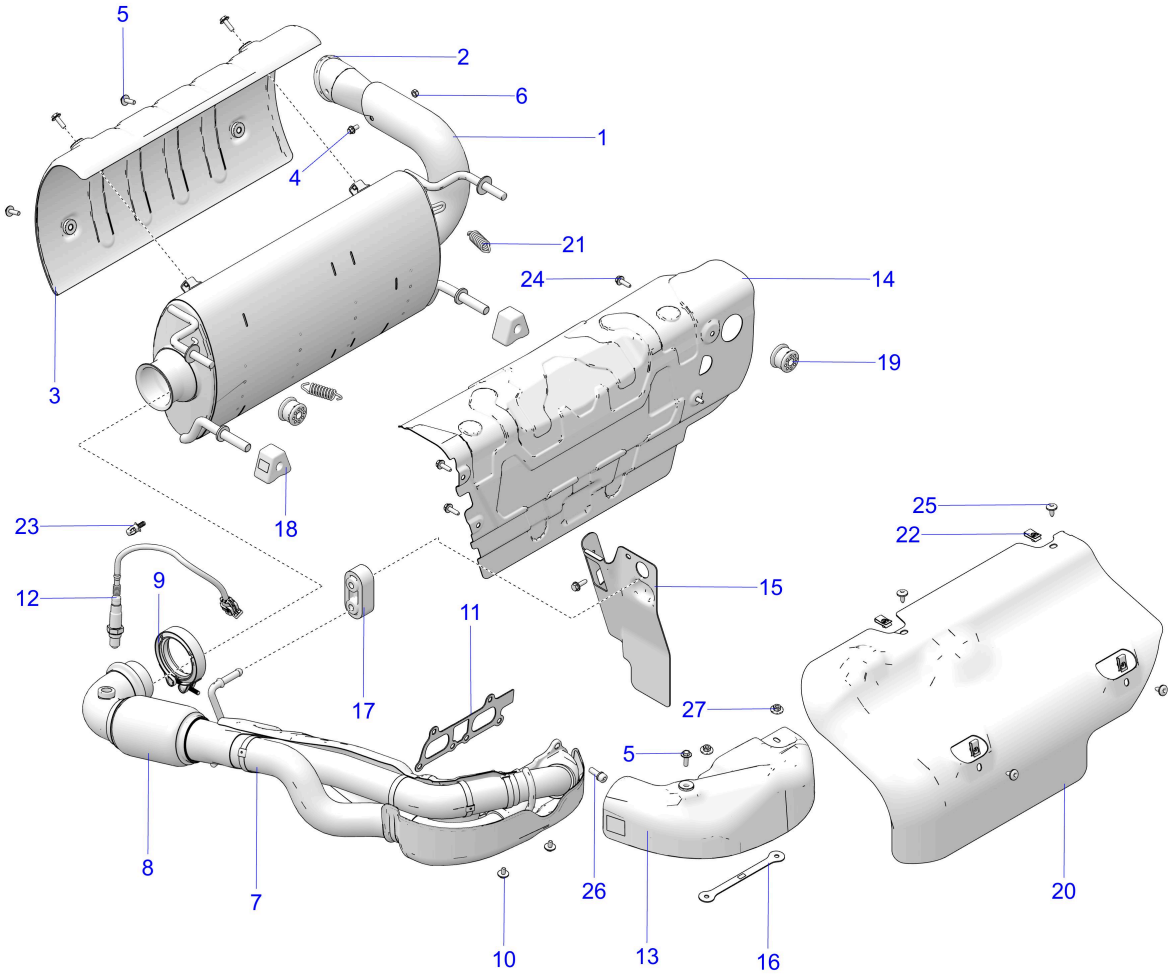

© 2025 Polaris Industries Inc. C760077

Reference #	*Part#*	*Description*	*Quantity*
1	1263824	ASM-SILENCER [INCLUDES 2-6]	1
2	1263697	WELD-SPARK ARRESTOR	1
3	5272179	SHIELD-SILENCER	1
4	7517257	SCREW-HXFL-M6X1.0X12 10.9 ZPC	1
5	7520995	SCR-HHSEMS-M6X1.0X19 A286,LOCK	5
6	7547120	NUT-HEX-M6X1.0 8 SPC	1
7	1263881	ASM-HEADPIPE [INCLUDES 8-10]	1
8	1262623	ASM-JOINT,FLEX	1
9	7083069	CLAMP-GASKETED	1
10	7520291	SCR-HHSEMS-M6X1.0X10 A286,LOCK	2
11	3610357	GASKET-EXHAUST SEAL	1
12	4011853	SENSOR-LAMBDA,LSF 4.2	1
13	5272665	SHIELD-HEAT,HEADPIPE,FRONT UPR	1
14	5273911	SHIELD-HEAT, REAR	1
15	5274148	SHIELD-HEAT,SIDE,EXHAUST	1
16	5274332	BRKT-WASHER,EXHAUST,STRAP	1
17	5415027	MOUNT, ISOLATOR	1
18	5417101	MNT-ISOLATOR	2

19	5417758	ISOLATOR-EXHAUST,HANGER	2
20	5815213	SHIELD-HEAT,FRONT	1
21	7045211	SPRING-EXHAUST	2
22	7081305	CLIP-U SPEED NUT	4
23	7081496	CLIP FIR-TREE,DIA6-33MM	1
24	7518529	SCR-M6X1.0X20,HXHD,FLG,TDFM,BK	5
25	7518936	SCR-M6X1X16 TR/TX-M	4
26	7518984	SCR-HXFL-M5X0.8X12 4.8 ZPC NYL	6
27	7548005	NUT-HEX M6X1.0 8 ZPC SPC	2

Copyright 1996-2026 Polaris Industries U.S.A All rights reserved.